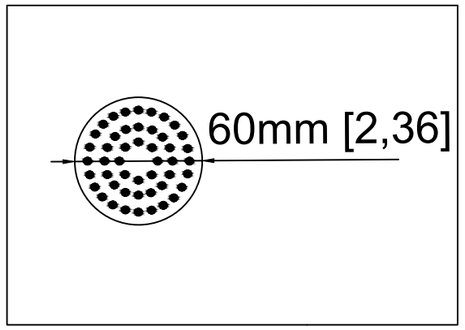
60mm [2,36]

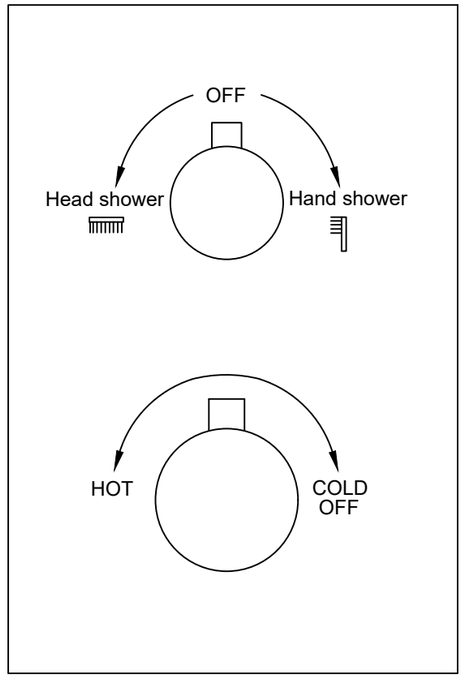
OFF
Head shower
Hand shower
HOT
COLD
OFF

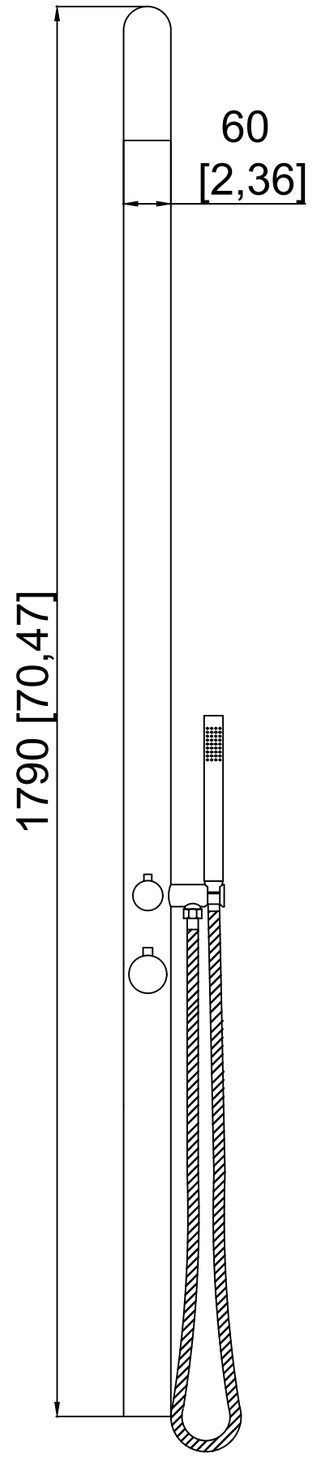
60
[2,36]
1790 [70,47]

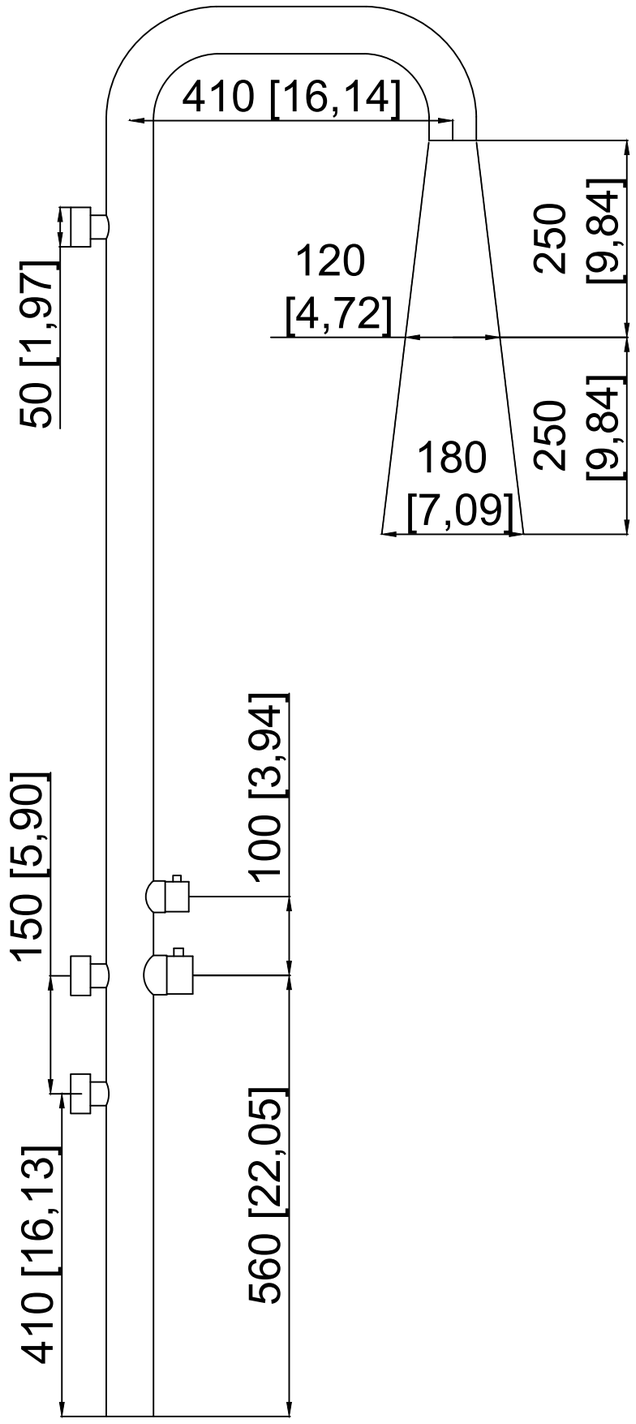
410 [16,14]
120
[4,72]
250
[9,84]
250
[9,84]
180
[7,09]
50 [1,97]
150 [5,90]
100 [3,94]
410 [16,13]
560 [22,05]